air pro

12" DESK FAN

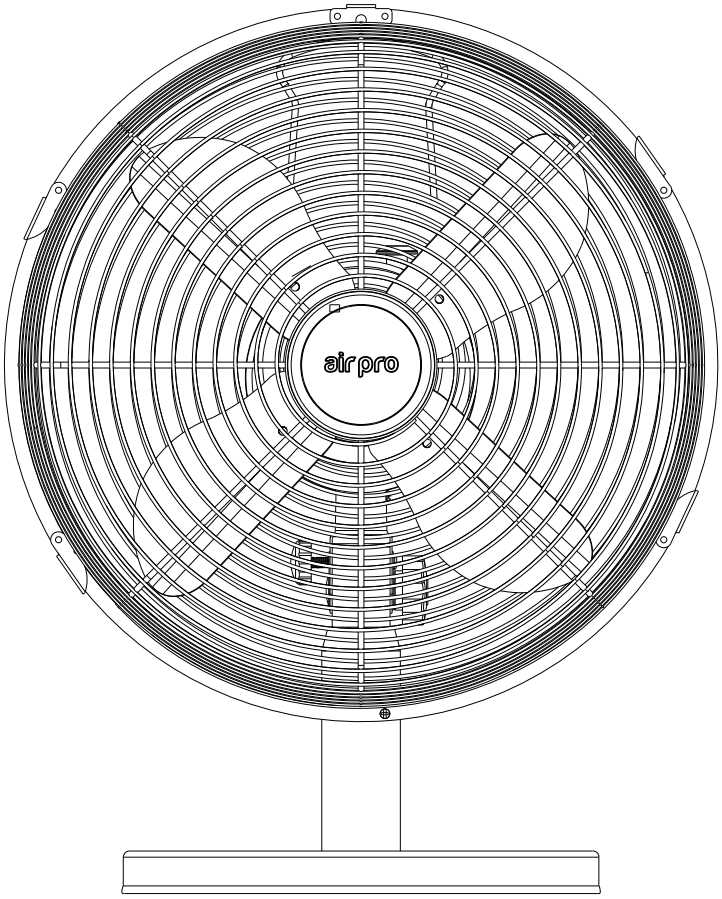

INSTRUCTION MANUAL
BEDIENUNGSANELEITUNG
MODE D ’EMPLOI
MANUALE DI ISTRUZIONI
MANUAL DE INSTRUCCIONES
HANDLEIDING

AIRPROHOME.COM

Please keep this manual safe for future reference!

Thank you for selecting this Air Pro Desk Fan. Be sure to read this manual carefully before using your new product. Protect yourself and those around you by observing all safety information. Failure to comply with these instructions could result in personal injury and/or property damage.

If assistance is required, please contact our support team by emailing Support@airprohome.com

You can also contact us by scanning the QR code below

Model No: FT-30MD
SKU: AP0209/AP0210/AP0211/AP0212/AP0213
220-240V A.C 50-60Hz 35W

Note: The specifications and/or components of this appliance are subject to change without prior notice

1 Safety Instructions

When using electrical appliances, basic safety precautions should always be followed, including the following:

- Carefully read this instruction manual before using appliance.
- Ensure that the fan is switched off from the supply mains before removing the guard.
- Keep appliance out of reach of young children.
- This appliance is not intended for use by persons (including children) with reduced physical, sensory or mental capabilities, or lack of experience and knowledge, unless they have been given supervision or instruction concerning use of the appliance by a person responsible for their safety.
- Children should be supervised to ensure that they do not play with the appliance.
- Ensure children and babies do not play with plastic bags or any packaging materials.
- Do not disassemble the appliance. There are no user serviceable parts inside.
- **VERY IMPORTANT**:
  Ensure that appliance does not get wet (water splashes etc.).
  Do not use appliance with wet hands.
  Do not immerse appliance in water or other liquids or use near sinks, baths or showers.
- Always operate the appliance from a power source of the same voltage, frequency and rating as indicated on the product identification plate.
- Position the power supply lead properly so that they will not be walked on or pinched by items placed on or against them, or by the appliance itself.
- Use appliance only for its intended use. Appliance is intended for household use only and not for commercial or industrial use.
- Do not use appliance if it has been dropped or if any part of appliance (including cord or plug) has been damaged. Take appliance to your nearest authorised service centre or qualified dealer for inspection or repair.
- If the supply cord is damaged, it must be replaced by the manufacturer, its service agent or similarly qualified persons in order to avoid a hazard.
- Use only accessories recommended or supplied by an authorised service centre or qualified dealer. The use of accessories not intended for use with this appliance may cause injuries to the user or damage to the appliance.
- Do not install the unit on other appliances, on uneven surfaces or where it could be subject to: heat sources (e.g. radiators or stoves), direct sunlight, excessive dust or mechanical vibrations.

- Appliance should not be used outdoors, placed near a hot gas or electrical burner or placed in a heated oven.

- Do not install near any heat sources such as radiators, heat registers, stoves, or other apparatus that produce heat.

- Do not operate appliance underneath or near flammable or combustible materials (e.g. curtains). Keep at least 300mm clearance around sides, back, front and top.

- Unplug this apparatus during lightning storms or when unused for long periods of time.

- Do not block any ventilation openings.

- Turn off and unplug before cleaning or storing.

- Any type of servicing, apart from ordinary cleaning, must be carried out by an authorised service centre or qualified dealer. There are no user serviceable parts in this appliance.

- If this appliance is used by a third party, please supply the instruction manual with it.

- Do not misuse the cord. Never carry the appliance by the cord or pull to disconnect it from the outlet. Instead, grasp the plug and pull to disconnect.

- Do not insert or allow foreign objects to enter the grille openings as this may cause damage to the appliance and/or injury to the user.

- No liability can be accepted for any damage caused by non-compliance with these instructions or any other improper use or mishandling of appliance.

Additional Safety Instructions

If using an extension cord:

- The cord should be checked and tested by an authorised service centre or a qualified dealer.

- The technical specifications of the extension cord must match or exceed the technical specifications of this appliance.

- Do not allow the cord to hang over the edge of the work surface or to come into contact with stoves or other hot surfaces.

- If the cord or plugs are worn or damaged, do not use.

- Unplug from the power socket by grasping the plug body - Do not pull on the cord.

2 Components

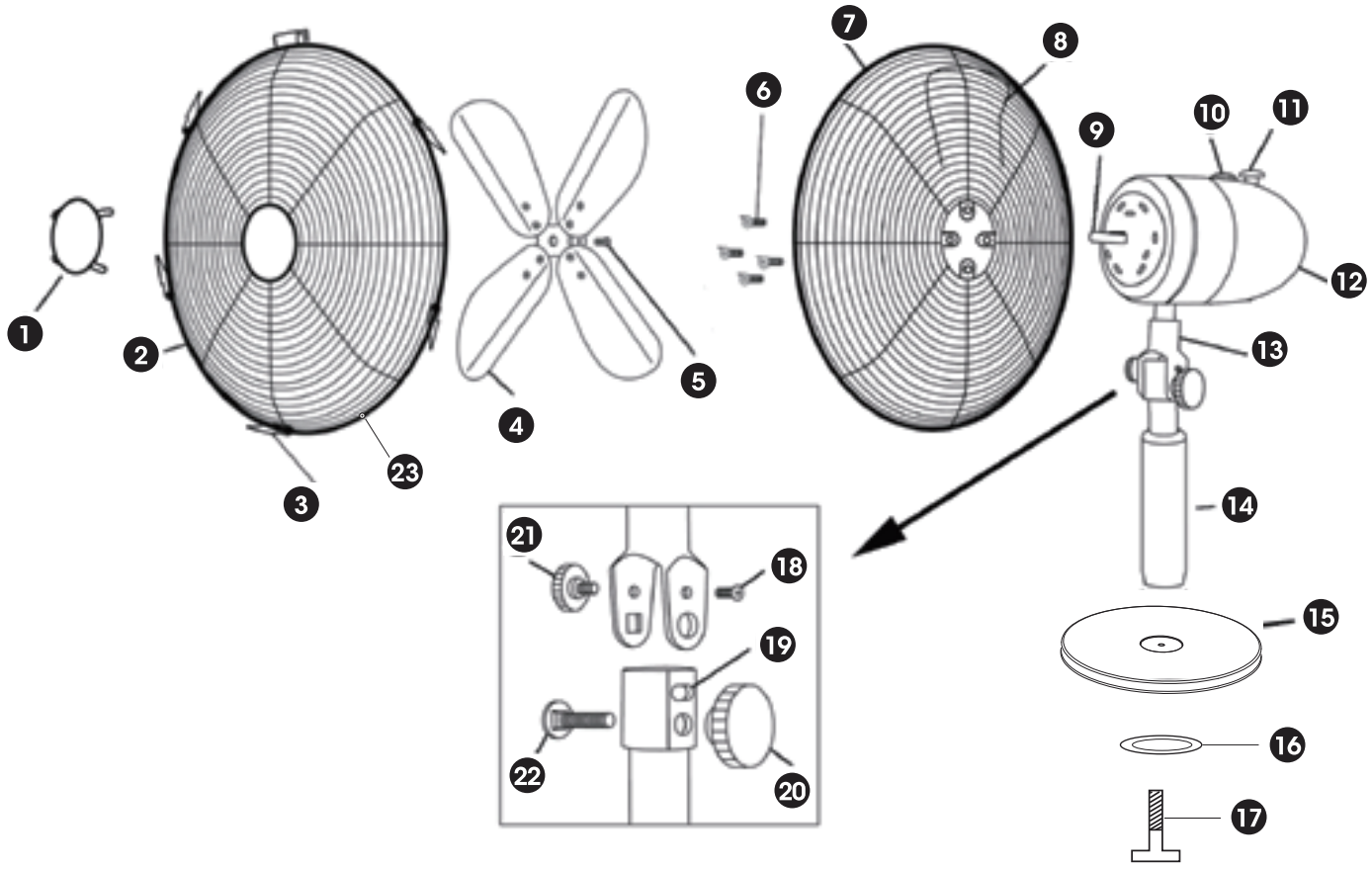

1. Fan Guard Cover
2. Front Fan Guard
3. Locking Clip
4. Fan Blade
5. Fan Blade Locking Screw
6. Rear Fan Guard Screws
7. Rear Fan Guard
8. Carry Handle
9. Motor Shaft
10. On / Off / Speed Knob
11. Oscillating Knob
12. Motor Housing
13. Neck Joint
14. Tube
15. Base
16. Base Washer
17. Base Thumb Screw
18. Tilt Range Screw
19. Tilt Range Screw Slot
20. Tilt Adjustment Knob
21. Tilt Range Knob
22. Tilt Adjustment Bolt
23. Safety Screw

*Pictures are for illustration purposes only.

3 Assembly

1. Unpack all parts from the carton.
2. 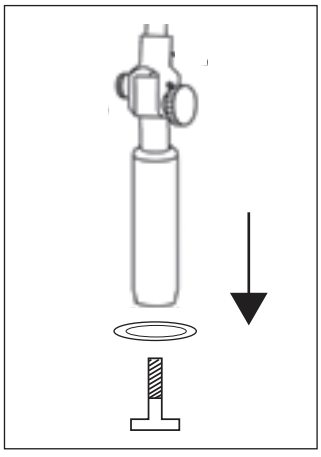

   Unscrew the base washer and base thumb screw from tube.

3. 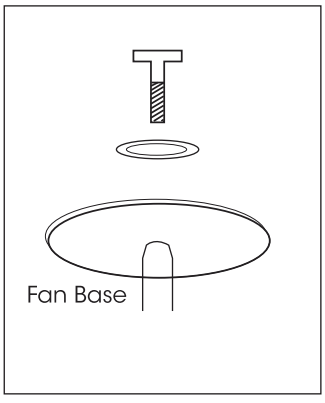

   Place the base washer on the botton of the base and secure with base thumb screw.

4. 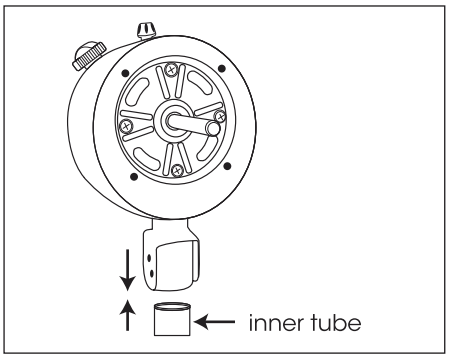

   Attach motor to the inner tube. Follow the position of the hole slot.

5. 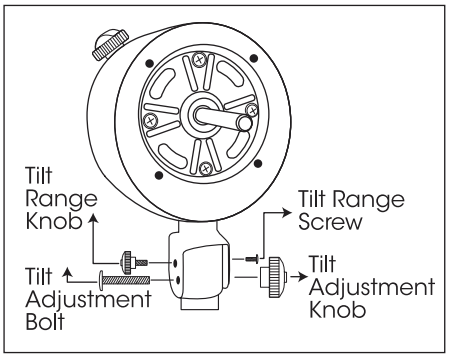

   Fix the joint screw through the inner tube and tighten it. Then fasten with vertical position knob and position screw.

6. Insert rear fan guard.

7.

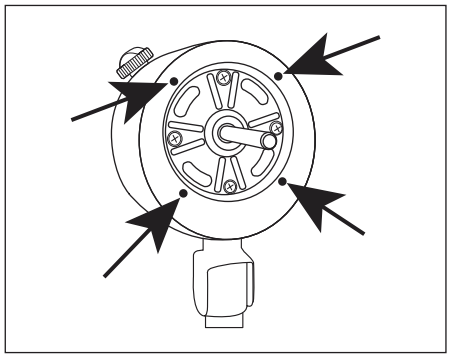

(a) Remove the 4 screws.

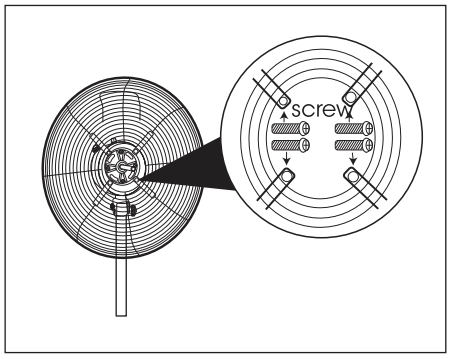

(b) Fasten the rear fan guard with 4 screws.

8. Insert fan blade.

9.

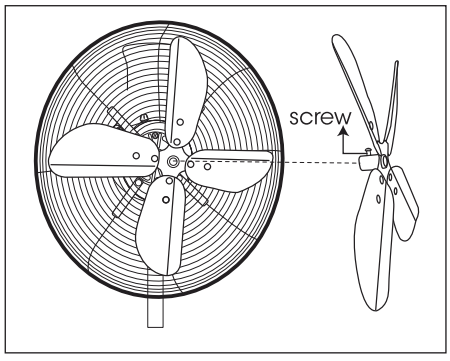

Put in the fan blade to the motor shaft and fasten with the blade locking screw.

10.

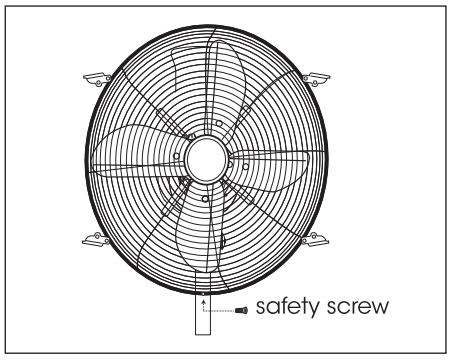

Fix the front guard onto the rear guard & fasten it with the safety screw and closing the clips over the outer rim.

4 Instructions for Use

Remove the cable tie and unravel the cordset before operation.

4.1 Head Tilt

The fan and motor assembly Can be tilted up and down to your desired angle.

To adjust the tilt angle, undo the adjustment knob, tilt the head to the desired angle and then re-tighten the knob.

4.2 Fan On / Off / Speed

Rotate the knob to position I for a low speed, II for a medium speed and III for a high speed.

Rotate the knob to position 0 to switch the Fan off.

4.3 Oscillation

Press the clutch knob down to activate the oscillating function. The fan head will swing from side to side whilst blowing air.

To stop oscillation, allow the Fan head to move into the desired position and then pull the clutch knob up.

5 Care and Cleaning

- Ensure that the fan is switched off from the supply mains before removing the guard.
- Turn off and unplug the unit prior to cleaning.
- Clean the motor housing and body assembly with a clean, damp cloth and wipe dry.
- Never spray with liquids or submerge the Fan in water or any other liquid.
- Do not use flammable liquids, chemicals, abrasive creams, steel wool or scouring pads for cleaning.

6 Storage

Switch off and unplug the fan.

Coil the cable loosely. Do not kink or pull the cable

tight. Store your fan in a cool, dry location

INFORMATION SHEET FOR FANS

AP0209/AP0210/AP0211/AP0212/AP0213 (FT-30MD)

Description	Symbol	Value	Unit
Maximum fan flow rate	F	39.25	m^3/min
Fan power input	P	33.10	W
Service value	SV	1.19	(m^3/min)/W
Standby power consumption	P_{SB}	-	W
Seasonal electricity consumption	Q	10.59	kWh/a
Fan sound power level	L_{WA}	58.77	dB(A)
Maximum air velocity	c	2.68	m/sec
Measurement standard for service value	IEC 60879: 2019		

If further assistance is required, please contact our support team by emailing
Support@airprohome.com

You can also contact us by scanning the QR code below

IMPORTER: MRIAH LTD. 1 PINDAR ROAD, HODDESDON, EN11 0BZ, UK

EC REP: VISHTEC LTD. 3RD FLOOR OFFICE 5, PLOVDIV 2,
LIUBEN KARAVELOV, 4002, BG